CROWNLINK®

專業薄膜開關連接器第一品牌

RoHS

0T:TIN PLATED

0G:GOLD PLATED

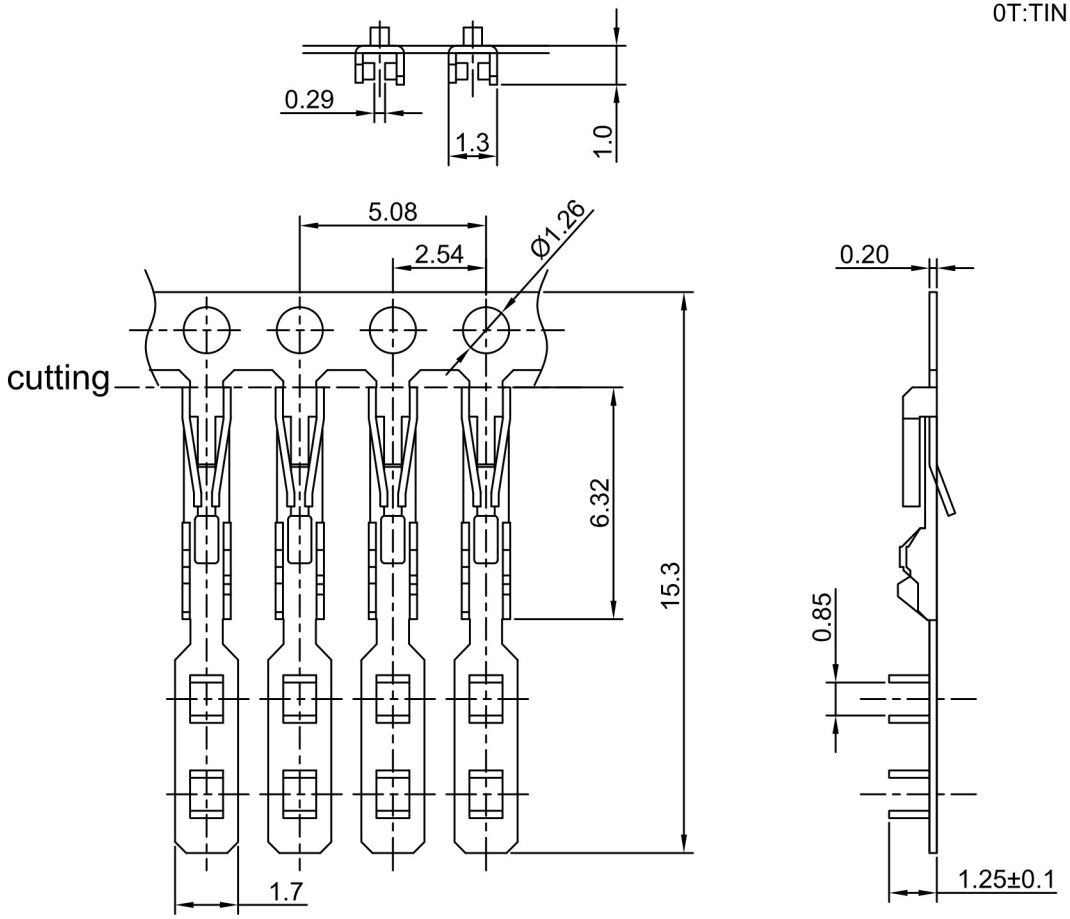

- ◆ FOR 2802 SERIES HOUSING
- ◆ SPECIFICATIONS

  VOLTAGE RATING：250 VAC RMS

  CURRENT RATING：3 AMP

  DIELECTRIC WITHSTANDING VOLTAGE：

  AC 250V FOR 1 MINUTE

  INSULATION RESISTANCE：500 MΩ
- ◆ ENVIRONMENTAL

  TEMPERATURE RANGE：-40°C~+105°C
- ◆ PART NO.

  2811 - 30K - 0T(0G) - F

  SERIES NO.

  30K/REEL

  0T:TIN PLATED
  0G:GOLD PLATED
  OHER PLATINGS ON REQUEST

  FEMALE

REV/版本	MODIFIED CONTENT /變更內容	DRAWN/繪圖	DATE/日期
D	TEMINAL HEIGHT MODIFIED	LACY	2020.03.04
C	CLIP HEIGHT MODIFIED	TRACY	2016.08.04
B	MATERIAL CHANGE	ANNIE	2013.02.22

TOLERANCE RANGE/公差範圍	
X.	±0.20
.X	±0.10
.XX	±0.05

DRAWN/繪圖 LACY	DATE/日期 2020.03.04	CROWNLINK® THE LEADING MANUFACTURER OF FPC & FFC CONNECTOR,HOUSING AND DOME.	
CHECK BY/審查 VIVIAN	DATE/日期 2020.03.04	PRODUCT NAME/品名 2.54mm PITCH FFC/FPC CONNECTOR	
APPROVED BY/核准 WENDY	DATE/日期 2020.03.04	PART NO./料號 2811-30K-0T(0G)-F	SCALE/比例 5:1
PACKAGE/包裝	30,000PCS/REEL	MATERIAL/材質 PHOSPHOR BRONZE	ANGLE OF VIEW/視角

SIZE/圖號	UNIT/單位
A4	mm
SHEET/頁碼 1 OF 1	REV/版本 D