CROWNLINK®

專業薄膜開關連接器第一品牌

ROHS

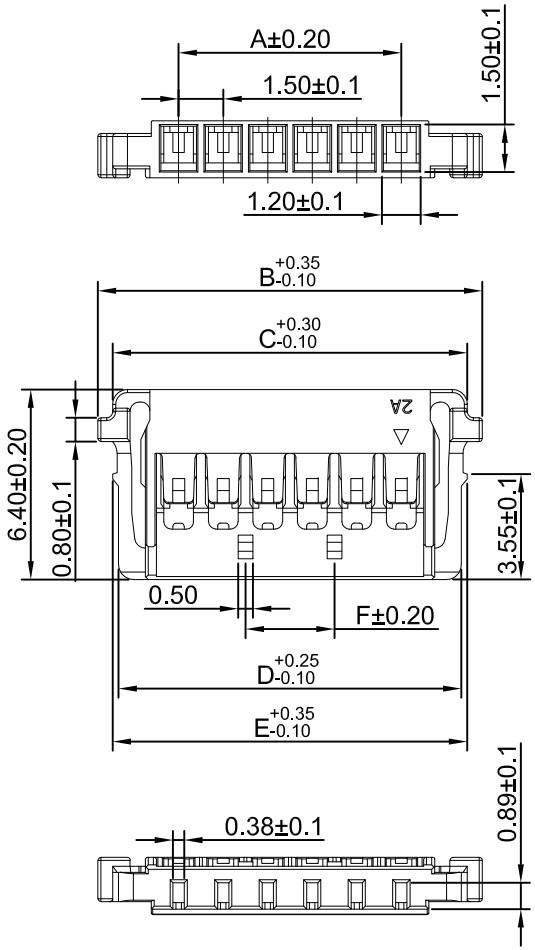

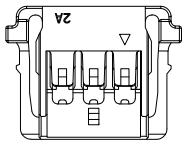

02PIN~04PIN

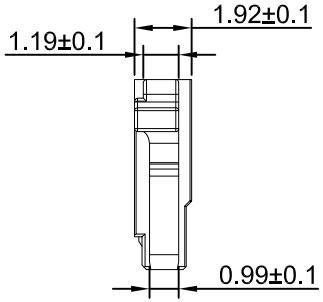

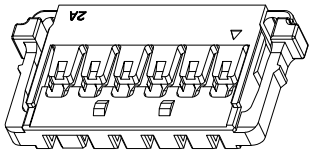

◆ FOR 1503 SERIES CONNECTOR

◆ SPECIFICATIONS

VOLTAGE RATING：150V AC , DC

CURRENT RATING：3A AC , DC

CONTACT RESISTANCE：20mΩ MAX

INSULATION RESISTANCE：1000 MΩ MIN.

◆ ENVIRONMENTAL

TEMPERATURE RANGE：-25°C~+85°C

WITHSAND VOLTAGE：500 V AC / MINUTE

◆ PART NO.

1503H - XX N H

SERIES NO.

MOLD NO.

NO LOGO

CIRCUITS NUMBER 02 TO 12

Part NO.	Dimensions					
	A	B	C	D	E	F
02	1.50	6.95	5.95	5.55	5.85	/
03	3.00	8.45	7.45	7.05	7.35	/
04	4.50	9.95	8.95	8.55	8.85	/
05	6.00	11.45	10.45	10.05	10.35	3.00
06	7.50	12.95	11.95	11.55	11.85	3.00
07	9.00	14.45	13.45	13.05	13.35	4.50
08	10.50	15.95	14.95	14.55	14.85	6.00
09	12.00	17.45	16.45	16.05	16.35	7.50
10	13.50	18.95	17.95	17.55	17.85	9.00
11	15.00	20.45	19.45	19.05	19.35	10.50
12	16.50	21.95	20.95	20.55	20.85	12.00

REV/版本	MODIFIED CONTENT /變更內容	DRAWN/繪圖	DATE/日期

TOLERANCE RANGE/公差範圍

.X ±0.35 .X° ±3°
.XX ±0.25 .XX° ±2°
.XXX ±0.15 .XXX° ±1°

DRAWN/繪圖 JUDY	DATE/日期 2024.06.26	CROWNLINK® THE LEADING MANUFACTURER OF FPC & FFC CONNECTOR,HOUSING AND DOME.					
CHECK BY/審查 VIVIAN	DATE/日期 2024.06.26	PRODUCT NAME/品名 1.50mm XHB HOUSING FOR CABLE					
APPROVED BY/核准 JASON	DATE/日期 2024.06.26	PART NO./料號 1503H-XXNH	PIN NUMBER/針數 02-12 PIN	SCALE/比例 4:1	SIZE/圖號 A4	UNIT/單位 mm	
PACKAGE/包裝	1,000/BAG	MATERIAL/材質 PA66 UL 94V -0	COLOR/顏色 BLACK COLOR	ANGLE OF VIEW/視角	SHEET/頁碼 1 OF 1	REV/版本 A	