CROWNLINK®

專業薄膜開關連接器第一品牌

ROHS

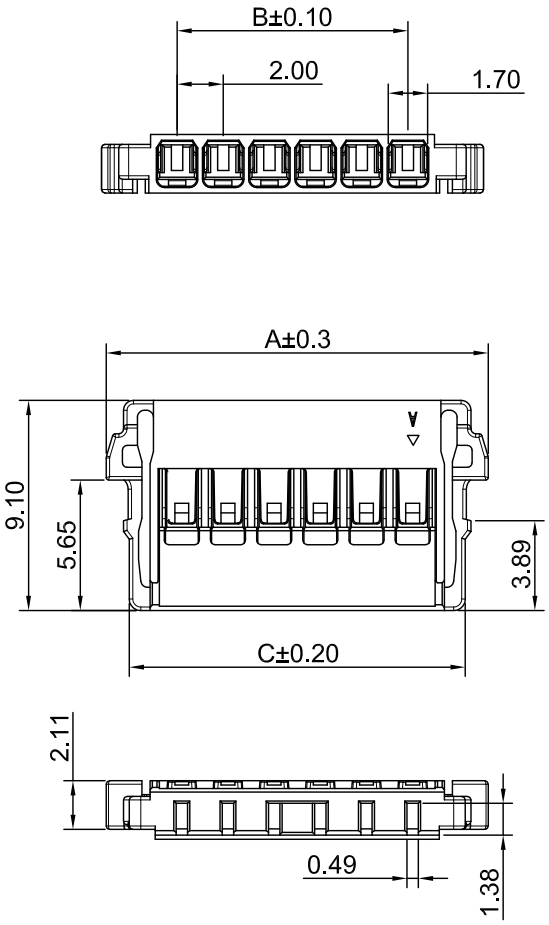

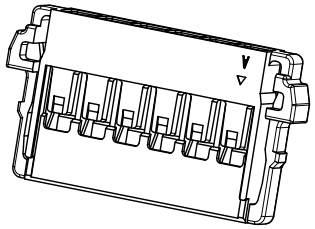

◆ FOR 2016 SERIES CONNECTOR

◆ SPECIFICATIONS

VOLTAGE RATING：250V AC , DC

CURRENT RATING：6.5A AC , DC

CONTACT RESISTANCE：20mΩ MAX

INSULATION RESISTANCE：1000 MΩ MIN.

◆ ENVIRONMENTAL

TEMPERATURE RANGE：-25°C~+85°C

WITHSAND VOLTAGE：800 V AC / MINUTE

◆ PART NO.

2016H - XX N H

SERIES NO.

MOLD NO.

NO LOGO

CIRCUITS NUMBER 02 TO 06

Part NO.	Dimensions		
	A	B	C
02	8.55	2.00	6.55
03	10.55	4.00	8.55
04	12.55	6.00	10.55
05	14.55	8.00	12.55
06	16.55	10.00	14.55

REV/版本	MODIFIED CONTENT /變更內容	DRAWN/繪圖	DATE/日期

.X ±0.30 .X° ±3°
.XX ±0.20 .XX° ±2°
.XXX ±0.10 .XXX° ±1°

TOLERANCE RANGE/公差範圍

DRAWN/繪圖 JUDY	DATE/日期 2024.07.04	CROWNLINK® THE LEADING MANUFACTURER OF FPC & FFC CONNECTOR,HOUSING AND DOME.					
CHECK BY/審查 VIVIAN	DATE/日期 2024.07.04	PRODUCT NAME/品名 2.00mm HOUSING FOR CABLE					
APPROVED BY/核准 JASON	DATE/日期 2024.07.04	PART NO./料號 2016H-XXNH	PIN NUMBER/針數 02-06 PIN	SCALE/比例 4:1	SIZE/圖號 A4	UNIT/單位 mm	
PACKAGE/包裝	1,000/BAG	MATERIAL/材質 PA66 UL 94V -0	COLOR/顏色 BLACK COLOR	ANGLE OF VIEW/視角	SHEET/頁碼 1 OF 1	REV/版本 A	